Model: SPS-2ABB

2” Aluminum Air Operated Pump

SAGE
PUMP SERVICES

Performance

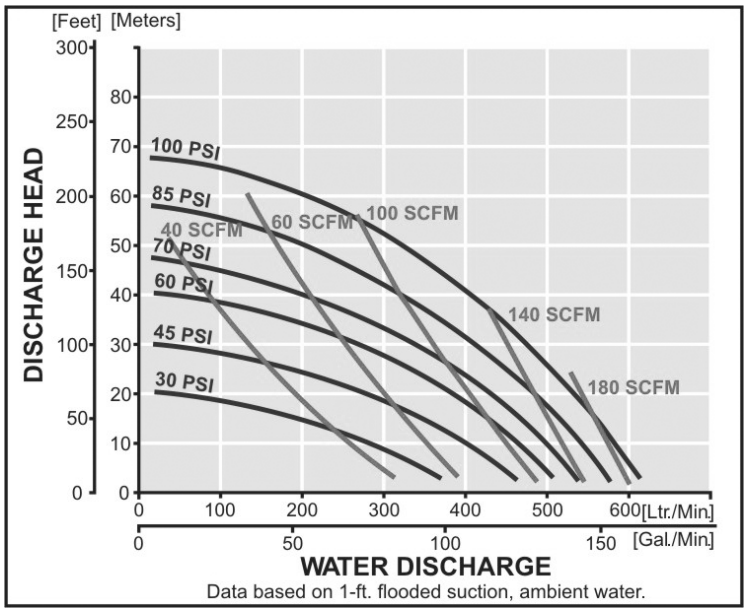

Specifications

Flow Rate
- Adjustable to ..... 0-164 (GPM)

Air Supply Pressure ..... 20-100 PSI

Port Size
- Suction ..... 2” ANSI Flange*
- Discharge ..... 2” ANSI Flange*
- **with tapped 2” Female NPT*

Air Inlet ..... 3/4” Female NPT (includes ball valve)

Air Exhaust ..... 1” Female NPT (includes silencer)

Max. Suction Lift
- Dry ..... 19’

Body Material ..... Aluminum

Air Motor ..... Aluminum

Elastomer ..... Buna N

Shipping Weight ..... 97 lbs.

Dimensions

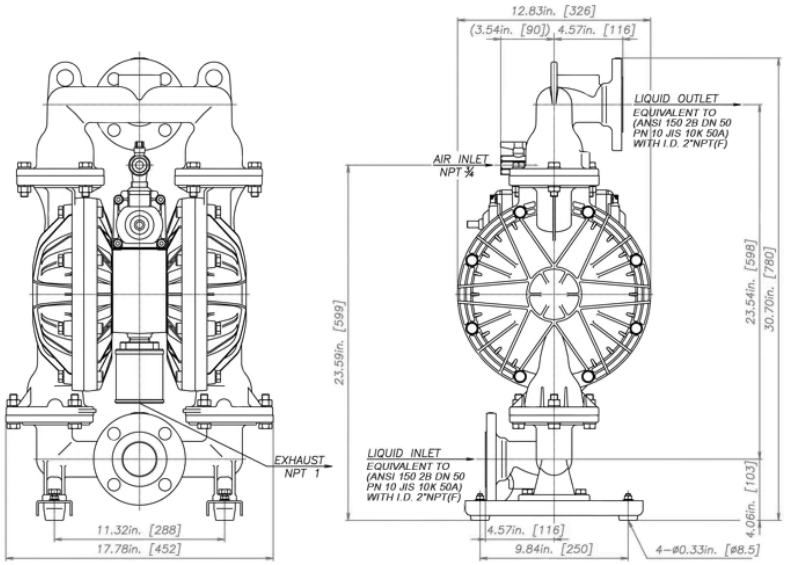

Toll Free: 883-563-1919

www.sagepump.com

Model: SPS-3ABB

3” Aluminum Air Operated Pump

SAGE
PUMP SERVICES

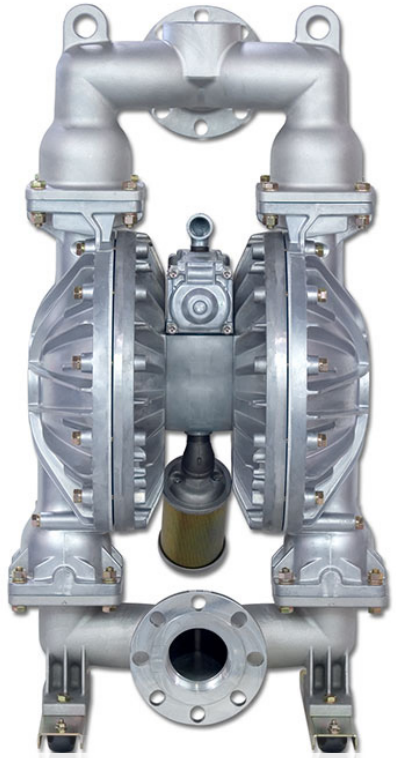

Performance

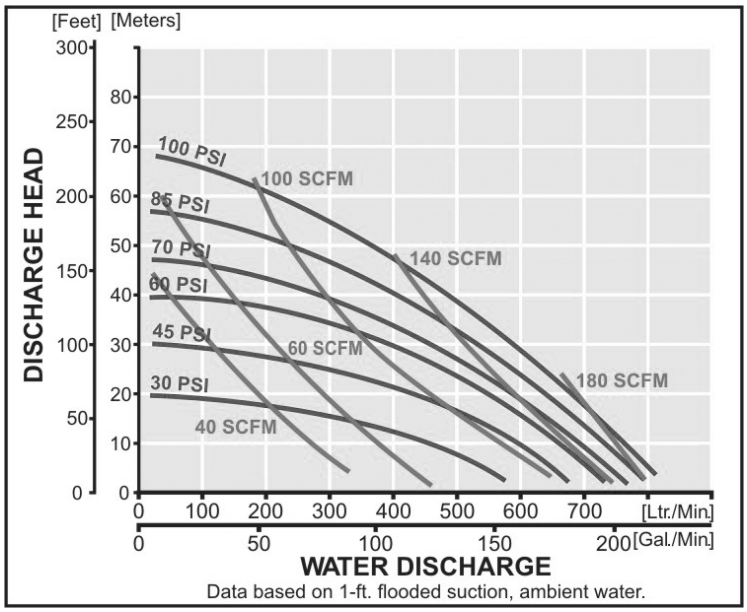

Specifications

Flow Rate
- Adjustable to ..... 0-215 (GPM)

Air Supply Pressure ..... 20-100 PSI

Port Size
- Suction ..... 3” ANSI Flange*
- Discharge ..... 3” ANSI Flange*
- **with tapped 3” Female NPT*

Air Inlet ..... 3/4” Female NPT (includes ball valve)

Air Exhaust ..... 1” Female NPT (includes silencer)

Max. Suction Lift
- Dry ..... 19’

Body Material ..... Aluminum

Air Motor ..... Aluminum

Elastomer ..... Buna N

Shipping Weight ..... 163 lbs.

Dimensions

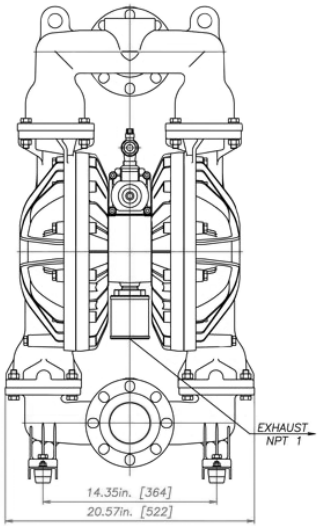

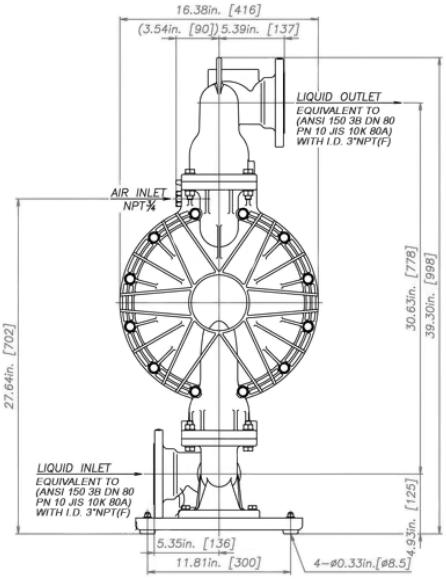

Model: SPS-2PBT

2” Polypropylene Air Operated Pump

SAGE
PUMP SERVICES

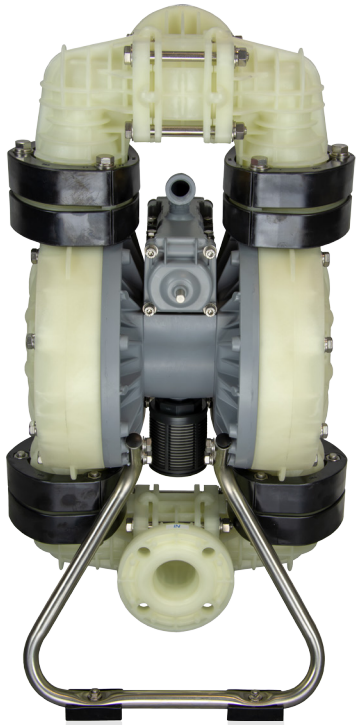

Performance

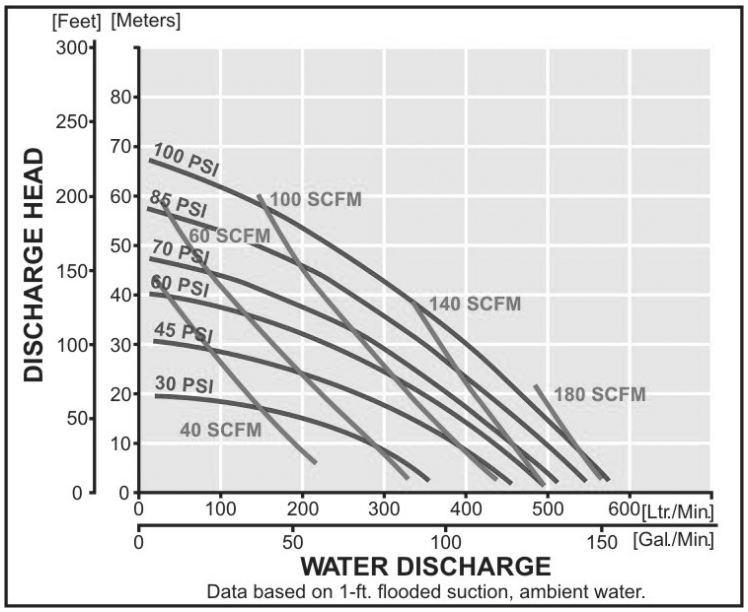

Specifications

Flow Rate	
Adjustable to	0-164 (GPM)
Air Supply Pressure	20-100 PSI
Port Size	
Suction	2” ANSI Flange
Discharge	2” ANSI Flange
Air Inlet	3/4” Female NPT (includes ball valve)
Air Exhaust	1” Female NPT (includes silencer)
Max. Suction Lift	
Dry	19’
Body Material	Polypropylene
Air Motor	PTFE Coated
Elastomer	PTFE
Shipping Weight	93 lbs.

Dimensions

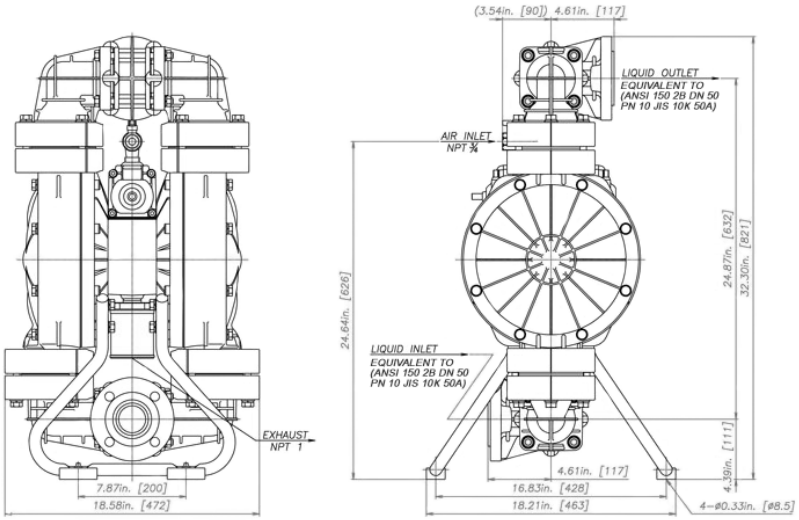

Model: SPS-3PBT

3” Polypropylene Air Operated Pump

SAGE
PUMP SERVICES

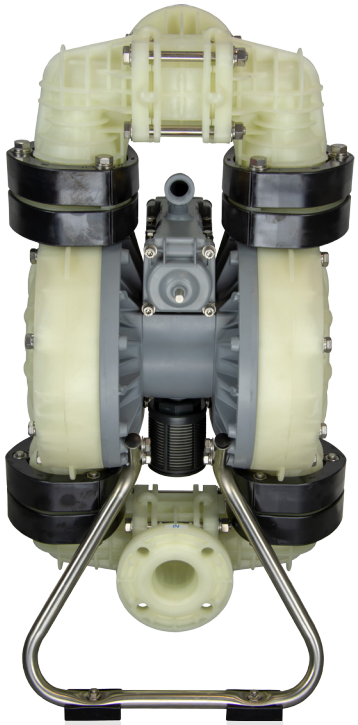

Performance

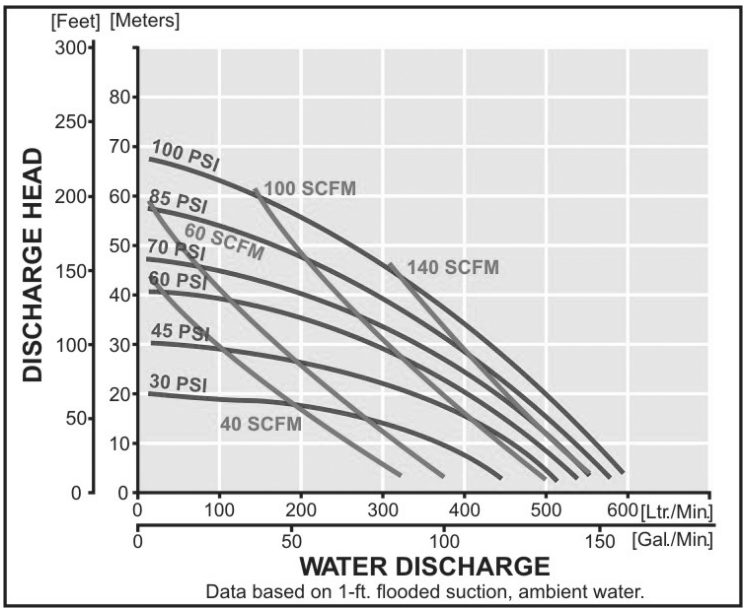

Specifications

Flow Rate	
Adjustable to	0-215 (GPM)
Air Supply Pressure	20-100 PSI
Port Size	
Suction	3” ANSI Flange
Discharge	3” ANSI Flange
Air Inlet	3/4” Female NPT (includes ball valve)
Air Exhaust	1” Female NPT (includes silencer)
Max. Suction Lift	
Dry	19’
Body Material	Polypropylene
Air Motor	PTFE Coated
Elastomer	PTFE
Shipping Weight	161 lbs.

Dimensions

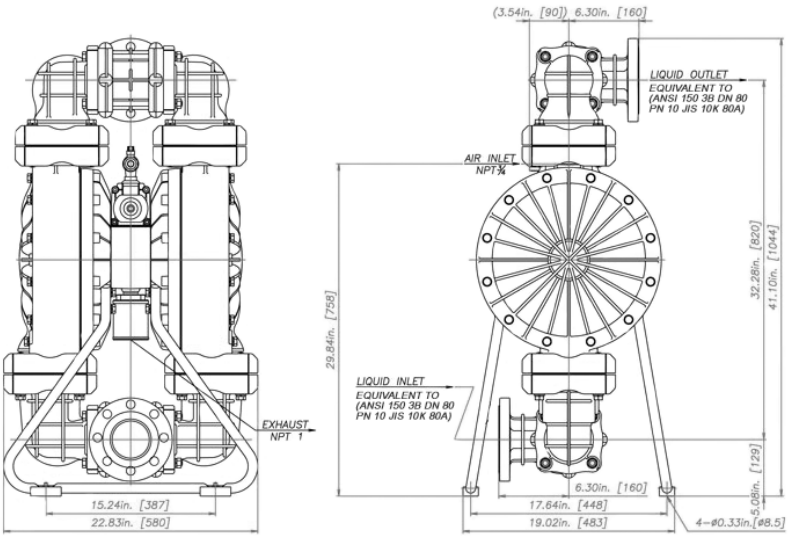

Toll Free: 883-563-1919

www.sagepump.com

Model: SPS-2SBT

2” Stainless Steel Air Operated Pump

SAGE
PUMP SERVICES

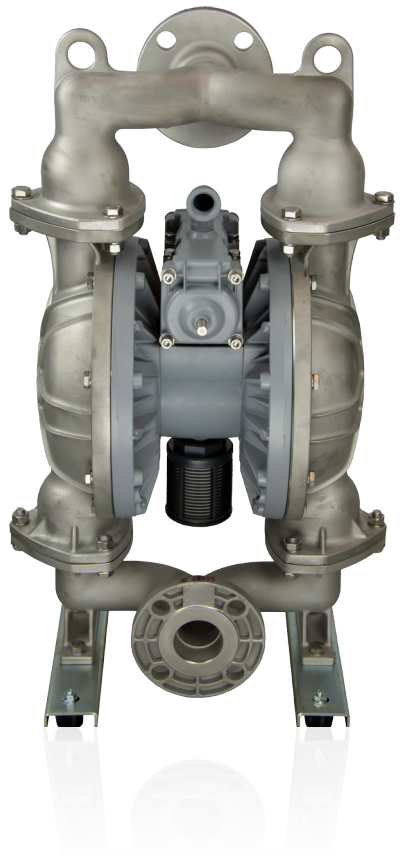

Performance

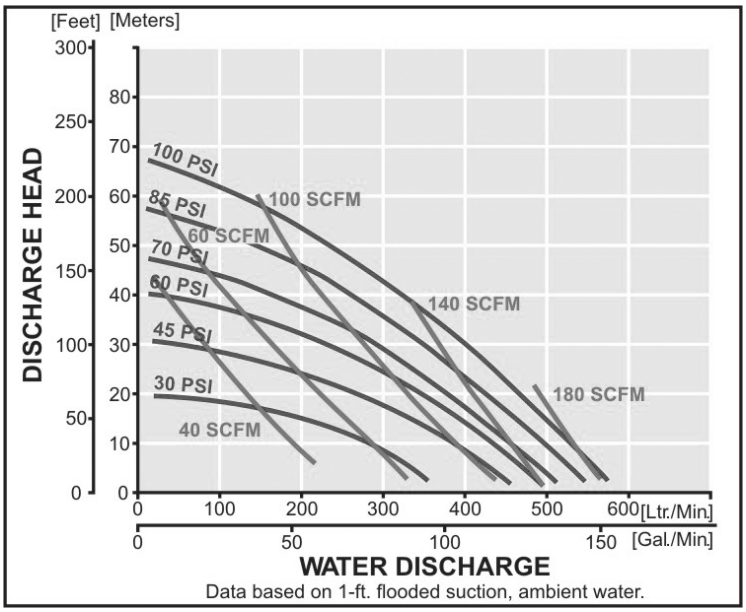

Specifications

Flow Rate	
Adjustable to	0-164 (GPM)
Air Supply Pressure	20-100 PSI
Port Size	
Suction	2” ANSI Flange
Discharge	2” ANSI Flange
Air Inlet	3/4” Female NPT (includes ball valve)
Air Exhaust	1” Female NPT (includes silencer)
Max. Suction Lift	
Dry	19’
Body Material	Stainless Steel
Air Motor	PTFE Coated
Elastomer	PTFE
Shipping Weight	147 lbs.

Dimensions

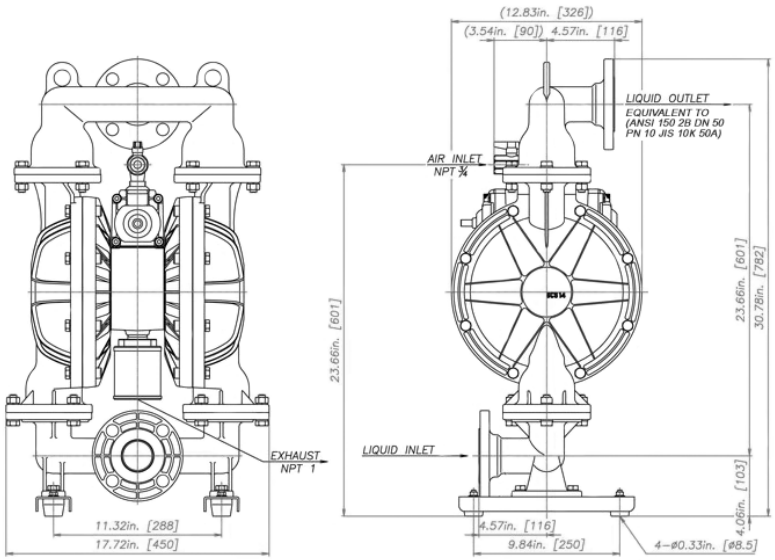

Model: SPS-3SBT

3” Stainless Steel Air Operated Pump

SAGE
PUMP SERVICES

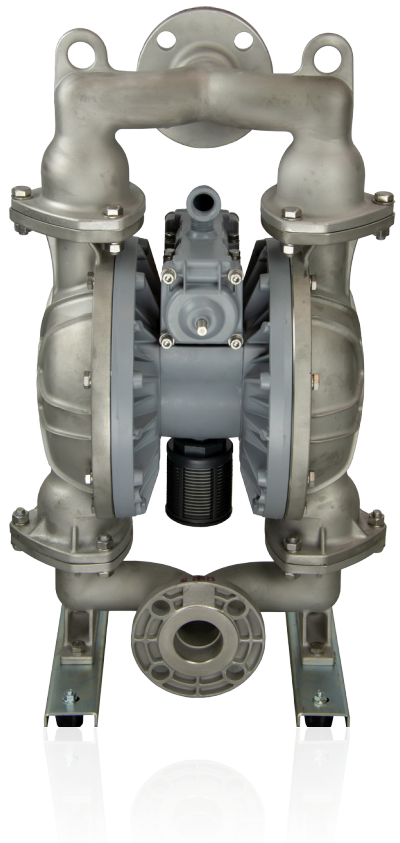

Performance

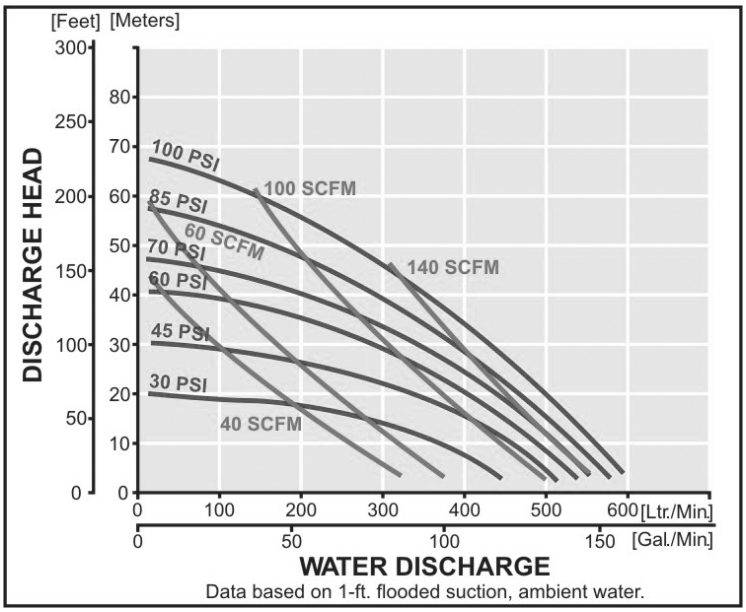

Specifications

Flow Rate	
Adjustable to	0-215 (GPM)
Air Supply Pressure	20-100 PSI
Port Size	
Suction	3” ANSI Flange
Discharge	3” ANSI Flange
Air Inlet	3/4” Female NPT (includes ball valve)
Air Exhaust	1” Female NPT (includes silencer)
Max. Suction Lift	
Dry	19’
Body Material	Stainless Steel
Air Motor	PTFE Coated
Elastomer	PTFE
Shipping Weight	245 lbs.

Dimensions

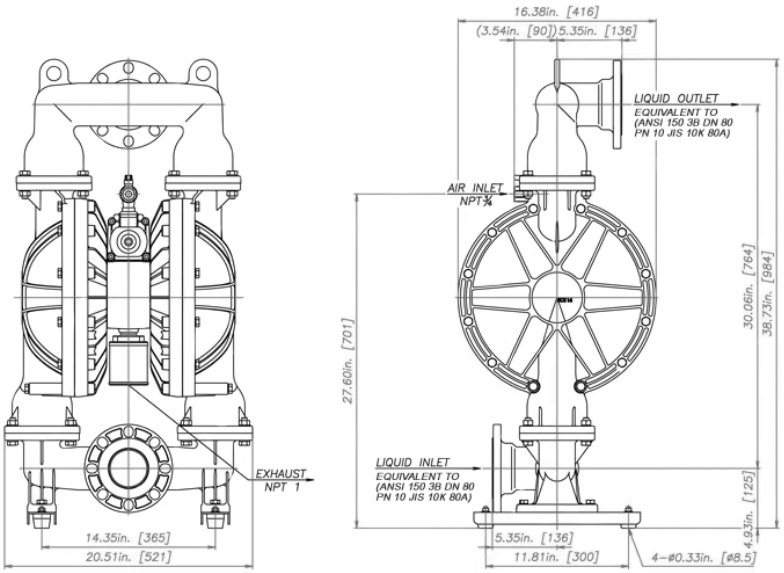

Toll Free: 883-563-1919

www.sagepump.com